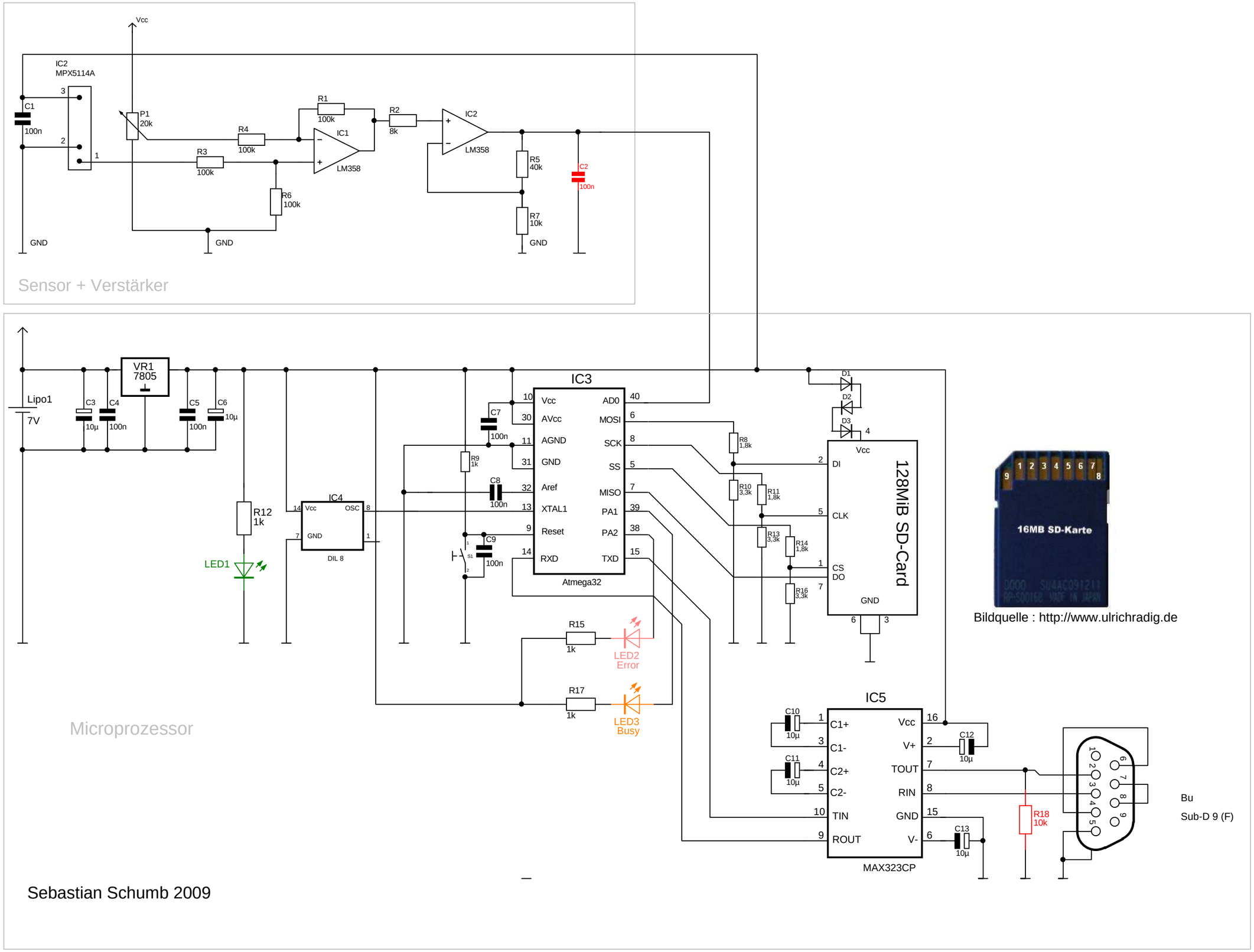
Vcc
IC2
MPX5114A
C1
100n
P1
20k
R4
100k
R3
100k
R6
100k
R1
100k
IC1
LM358
R2
8k
IC2
LM358
R5
40k
R7
10k
C2
100n
GND
Sensor + Verstärker
Lipo1
7V
VR1
7805
C3
10µ
C4
100n
C5
100n
C6
10µ
R12
1k
LED1
IC4
DIL 8
IC3
Atmega32
Vcc
AVcc
AGND
GND
Aref
XTAL1
Reset
RXD
AD0
MOSI
SCK
SS
MISO
PA1
PA2
TXD
C7
100n
R9
1k
C8
100n
C9
100n
S1
R8
1,8k
R10
3,3k
R11
1,8k
R13
3,3k
R14
1,8k
R16
3,3k
D1
D2
D3
128MiB SD-Card
DI
CLK
CS
DO
16MB SD-Karte
Bildquelle : http://www.ulrichradig.de
R15
1k
LED2
Error
R17
1k
LED3
Busy
Microprozessor
IC5
MAX323CP
C1+
C1-
C2+
C2-
TIN
ROUT
V+
TOUT
RIN
V-
C10
10µ
C11
10µ
C12
10µ
C13
10µ
R18
10k
Bu
Sub-D 9 (F)
Sebastian Schumb 2009